ADDENDUM 1

TO

Town of Rosman and City of Brevard Waterline Interconnect
DWI Project Number SRP-D-ARP-0028

TRANSYLVANIA COUNTY

This Addendum No. 1 is issued this the 10th day of September 2024 to all parties who hold a set of Bid Documents for the project entitled: "Town of Rosman and City of Brevard Waterline Interconnect" for Transylvania County. This Addendum 1 shall become part of the Contract Documents and its receipt shall be acknowledged on the bid documents at the time of bidding.

The following additions, revisions, and/or clarifications shall be made to the Contract Documents:

General

A. Reminder: The bid opening for the project is **Thursday, September 19, 2024** at 2:00 pm at the Transylvania County Administrative Building located at 101 S. Broad Street, Brevard, NC.
B. The mandatory pre-bid meeting was held on August 28, 2024. Five prime bidders were represented: Austin Construction, Buckeye Bridge, Carolina Specialties, Hyatt Pipeline, and TP Howard. A sign-in sheet is attached.

Bid Form

A. See attached revised bid form. Changes include:
    a. Revised quantities of Items 5 & 6 (HDD)
    b. Corrected allowance unit price placement within bid sheet.

Plan Sheets

A. See attached revised Sheets C-1 and C-4. Changes have been clouded and are described below and in other revised documents.

Measurement & Payment

A. See attached revised 00800 - Measurement and Payment. Changes include:
    a. Item 2 – Clarifying that payment will be made on the horizontal station-to-station measurement of pipe installed.
    b. Item Items 5 & 6 - Clarifying that once the need for rock boring is encountered, the rest of the HDD bore will be paid under the rock bore line item regardless of material bored through.
    c. Items 5 & 6 – allowing 12" DR18 fusible C900 PVC as an alternate pipe material.
    d. Items 5 & 6 – Clarifying that the bore exit must surface within 50' longitudinally and 20' laterally of the location shown on the plans, otherwise the bore will not be accepted.
    e. Items 5 & 6 – Clarifying that payment will be made on the horizontal measurement between entry and exit pits, or between pit and transition to rock bore, whichever is applicable, and not based on actual pipe installed.
    f. Item 14 – removed "meter box" from description. ARV shall be installed in a manhole per revised detail on Sheet C-4.

Contractor/Supplier Questions

1) Is the by-pass piping around the mag meter vault PVC or DIP?

   Answer: PVC

2) What type of piping is the existing 18" waterline?

   Answer: DIP

3) Will concrete thrust blocks still be required behind fittings with mechanical restraints?

   Answer: Mechanical joint fittings are specified for this project, which require thrust blocks. Restrained joint piping/fittings are not intended for this project.

4) Is the 2" air release to be installed in meter box or manhole?

   Answer: Manhole. See revised detail on Sheet C-4.

5) Bid items 5 & 6 specify 14" HDPE by HDD through rock and soil, respectively. Can 12" DR18 fusible C900 PVC pipe be approved as equal to the HDPE?

   Answer: Yes, 12" DR18 fusible C900 PVC pipe is considered an acceptable alternative to 14" DR 9 HDPE. See revised 00301 - Bid Sheet, 00800 - Measurement and Payment, 02780 - Horizontal Directional Drilling.

Advertisement for Bid

A. See attached revised Advertisement for Bid.

Contract Documents and Technical Specifications Cover Sheet

A. See attached revised cover sheet for the contract documents.

This Addendum 1 is issued this the 10th day of September 2024.

Jacob Gray, PE

High Country Engineering, PC
81 Central Avenue
Asheville, North Carolina 28801
T: 828.230.4511
F: 828.348.5040

Firm Certificate No.: C-3347

END OF ADDENDUM 1

TRANSYLVANIA COUNTY
FINANCE OFFICE

PURCHASING AGENT
Jennifer L. Galloway
828.884.3104 x114

TRANSYLVANIA
COUNTY
NORTH CAROLINA

FINANCE DIRECTOR
Jonathan Griffin

101 South Broad Street
Brevard, NC 28712
828.884.3104 x110
Fax 828.884.3119

Pre-Bid Meeting
Interconnect

August 28, 2024 10:00AM EST

NAME	EMAIL	PHONE
Shane Hebert	sherbert@buckeyebridgellc.com	828-648-4511
Brian Austin	BrianGaustin@cgcompany.com	828-779-9887
Tommy Hart	tommy@hyattpipeline.com	828-702-0702
Rob Hyatt	RHyatt@HyattPipeline.com	828-506-6654
Danny Dash	danny@tphowards.com	828 628-1369
Kelly Mosser	KMosser@CSCWNC.com	828-606-0108
Christian Carswell	ccarswell@cscwnc.com	828-433-1122

Meagan O'Neal
Jennifer Galloway
David McNeill
Jaime Laughter
Chad Owenby
Larry Reece
} Transylvania County

Michael Goforth
Jacob Gray
} High Country Engineering

CONTRACT DOCUMENTS AND TECHNICAL SPECIFICATIONS

TOWN OF ROSMAN AND CITY OF BREVARD

WATERLINE INTERCONNECT

DWI PROJECT NUMBER SRP-D-ARP-0028

FOR

TOWN OF ROSMAN	TRANSYLVANIA COUNTY	CITY OF BREVARD
6 MAIN STREET	101 S. BROAD STREET	95 W. MAIN STREET
ROSMAN, NC 28772	BREVARD, NC 28712	BREVARD, NC 28712

HIGH COUNTRY ENGINEERING, P.C.
81 CENTRAL AVENUE
ASHEVILLE, NORTH CAROLINA 28801
T:828-230-4511
Firm No. C-3347
CONTACT: Jacob Gray, PE

Project Number: TRA012

SECTION 00100
ADVERTISEMENT FOR BIDS

Sealed bids for the project entitled **Town of Rosman and City of Brevard Waterline Interconnect** will be received by **Transylvania County** until **2:00 PM** EST per Verizon Cellular Clock **September 19, 2024**. The bids will be received at the **Transylvania County Administrative Building located at 101 S. Broad Street, Brevard, NC 28712** and then publicly opened and read aloud.

The project generally consists of the following:

- Approx. 475 LF of 12-inch PVC C-900 water main
- Approx. 760 LF of 14-inch HDPE installed by horizontal directional drilling
- Meter vault with two-way meter

Complete digital plans, specifications, and bidding documents are available through the online electronic bid service http://www.questcdn.com/. QuestCDN shall be considered the Issuing Office for purposes of the bid documents. You may download the digital plan documents for a non-refundable charge of $15.00 by inputting Quest project #**9259498**

on the website's Project Search page. Please contact QuestCDN.com at 952-233-1632 or info@questcdn.com for assistance in obtaining a free membership registration and downloading this digital project information.

Prospective bidders are responsible for obtaining complete Plans, Specifications, and Bidding Documents, including any Addenda.

A Mandatory Pre-Bid Conference will be held at **10:00 AM on August 28th, 2024** at **Transylvania County Administrative Building located at 101 S. Broad Street, Brevard, NC 28712**. Representatives of the Owner and the Engineer will be present to discuss the Project. To be eligible to submit a bid, attendance of this conference is mandatory.

Bidders and other interested parties should note specific project requirements listed in the *Special Provisions* and *Supplemental Conditions* of these contract documents.

Bidders and other interested parties should note requirements for good faith efforts to promote and solicit Equal Opportunity Employment and participation of Minority and Women Owned Businesses (WMBE) and Historically Underused Businesses (HUB). Sections 00320 through 00341 of the contract documents are included for these purposes.

A certified check or cashiers check, payable to **Transylvania County**, or a satisfactory Bid Bond executed by a corporate surety licensed under the laws of North Carolina to execute such bonds in the amount equal to five percent (5%) of the bid total shall be submitted with each bid.

The selected bidder shall be required to furnish separate, 100 percent Performance and Payment Bonds in compliance with North Carolina General Statutes Section 143-129 and

Article 3 of Chapter 44A. The Performance Bond shall be in effect for one (1) year after the date of final acceptance of the project by the Owner.

Each bidder must be licensed as a Contractor in the State of North Carolina as provided in General Statutes Chapter 87.

Conditional or qualified bids will not be accepted.

The Owner reserves the right to waive any informalities or reject any or all bids. The Owner reserves the right to award a contract to the lowest, responsive, responsible bidder.

David McNeill
Assistant County Manager
Transylvania County

Project Title: Town of Rosman and City of Brevard Waterline Interconnect
Project Owner: Transylvania County
Date: September 10, 2024

Bid Schedule

Item No.	Description	Unit	Quantity	Unit Price	Total Price
1	Mobilization & Construction Staking	LS	1		
2	Precast Concrete Meter Vault w/8-inch Mag Meter	LS	1		
3	Panel Rack, Power and Controls	LS	1		
4	12" C900 PVC Waterline	LF	500		
5	14" HDPE or 12" Fusible PVC Directional Bore -- Through Soil	LF	100		
6	14" HDPE or 12" Fusible PVC Directional Bore -- Through Rock	LF	670		
7	12" - 90° Mechanical Joint Fittings	EA	2		
8	12" - 45° Mechanical Joint Fittings	EA	5		
9	12" - 22-1/2° Mechanical Joint Fittings	EA	1		
10	12" Gate Valve & Box	EA	3		
11	12"x12" Tee	EA	2		
12	18"X12" Tapping Sleeve & Valve	EA	1		
13	8"X12" Mechanical Joint Reducer	EA	2		
14	2" Air Release Valve	EA	1		
15	Fire Hydrant Assembly	EA	1		
16	Construction Entrance / Exit	EA	2		
17	Silt Fence	LF	450		
18	Non-Erosive Outlets	EA	3		
19	Site Stabilization	LS	1		
20	NCDOT Controlled Access Fence	LF	20		
21	Final Grassing & Cleanup	LS	1		
22	Rip Rap (ALLOWANCE)	TON	10	$40.00	$40.00
23	Trench Rock Removal (ALLOWANCE)	CY	5	$250.00	$5,000.00
24	Unsuitable Soil Removal (ALLOWANCE)	CY	10	$40.00	$40.00
25	Suitable Backfill (ALLOWANCE)	CY	10	$40.00	$400.00
26	#57 Washed Stone (ALLOWANCE)	TON	10	$50.00	$250.00
27	NCDOT Road Trench Repair and Patching	SF	100		
28	NCDOT Road 2" Asphalt Milling and Overlay	SF	1,250		
				Base Bid Price	

SECTION 00800
MEASUREMENT AND PAYMENT

1.0 Scope

This section covers the method of measurement and payment for items of work under this contract.

2.0 General

The total Bid Price for each section of the contract shall cover all the work required by the Plans and Contract Documents. All costs in connection with the proper and successful completion of the work including furnishing all materials, equipment, supplies, and appurtenances; providing all construction plant, equipment, and tools; and performing all necessary labor and supervision to fully complete the work, shall be included in the unit and lump sum prices bid. All work not specifically set forth as a pay item in the Bid Form shall be considered a subsidiary obligation of the Contractor and all costs in connection therewith shall be included in the prices bid.

3.0 Estimated Quantities

All estimated quantities stipulated in the Bid Form or other Contract Documents are approximate and are to be used only a) as a basis for estimating the probable cost of the work and b) for the purpose of comparing the bids submitted for the work. The actual amounts of work done and materials furnished under unit price items may differ from the estimated quantities. In some cases a unit price item has been added to the bid schedule for the purpose of establishing a cost basis in the event work associated with that item is required. No guarantee is expressed or implied that the quantities shown in the bid schedule shall be required to fulfill the Contract. The basis of payment for work and materials will be the actual amount of work done and materials furnished. The Contractor agrees that he will make no claim for damages, anticipated profits, or otherwise on account of any difference between the amounts of work actually performed and materials actually furnished and the estimated amounts thereof.

4.0 Work Items

The following describe the method of measurement and payment for the bid items shown in the Bid Schedule in Section 00300.

1 ITEM NO. 1 - Mobilization & Construction Staking: All work covered by this item will be paid at the contract lump sum price. The lump sum bid price shall not exceed 3% of the base bid amount. Mobilization and Construction Staking shall include the Contractor's cost for providing all contract bonds, certificates of insurance and other required contract items, the mobilization of equipment and personnel to the site, initial and subsequent construction staking, and other costs associated with the planning and beginning of construction.

Partial payment for this item will be made with the first and second partial pay estimates paid on the contract, and will be made at a rate of 50 percent of the lump sum price on each of these partial pay estimates.

2 ITEM NO. 2 - Precast Concrete Meter Vault w/8-inch Mag Meter: This item shall cover the installation of a precast concrete vault, internal piping, fittings and valves, an 8-inch electromagnetic flow meter, drain, 8" DIP within meter vault, all 8" DIP piping from the vault to the reducer, 8" dismantling joint, and coordination. Bid item includes all necessary components for a complete installation of meter vault and equipment. Payment will be made on the lump sum in the Bid Form.

3 ITEM NO. 3 - Panel Rack, Power and Controls: This item shall cover the installation of power service to the site, panel rack, meter base, main shut off, flow meter panel with all specified components, auxiliary circuits, stainless steel rain hood, conduits and start-up services as shown in plans and specifications. Payment will be made on the lump sum in the Bid Form.

4 ITEM NO. 4 - 12" C900 PVC Waterline: This item shall cover the installation of 12" C900 PVC Waterline, including but not limited to trench excavation, pipe laying, pipe bedding, indicator tape, tracer wire, flushing, disinfection, pressure testing, etc., as indicated in the plans and specifications. This shall include all equipment, labor, and material to complete the installation. Payment will be made on the horizontal station-to-station calculation of pipe installed.

5 ITEM NO. 5 - 14" HDPE or 12" Fusible PVC Directional Bore -- Through Soil: This item shall cover the installation of 14" HDPE DR9 or 12" fusible PVC DR 18 C900 pipe installed by Horizontal Directional Bore, including but not limited to preparation/clearing/grading of the boring entry and exit areas, pit excavation, drilling fluid and drilling fluid management, pipe fusing, transition couplings and other essentials, as indicated in the plans and specifications. This shall include all equipment, labor, and material to complete the installation. Payment will be made on the horizontal measurement between bore entry/exit, or bore entry and transition to rock boring, whichever is applicable, and not the actual pipe installed. Once the transition is made to rock boring, the bore will be paid through the Rock Bid Item. Bore exit must be located within a 30' wide and 60' long area centered on the location shown on the plans, otherwise the bore will not be accepted.

6 ITEM NO. 6 - 14" HDPE or 12" Fusible PVC Directional Bore -- Through Rock: This item shall cover the installation of 14" HDPE DR9 or 12" fusible PVC DR 18 C900 pipe installed by Horizontal Directional Bore in rock, including but not limited to preparation/clearing/grading of the boring entry and exit areas, pit excavation, drilling fluid and drilling fluid management, pipe fusing, transition couplings and other essentials, as indicated in the plans and specifications. This shall include all equipment, labor, and material to complete the installation. Payment will be made on the horizontal measurement between bore entry/exit, or the start of rock boring and the end of the bore, not the actual pipe installed. Once the transition is made to rock boring, the rest of the bore will be completed under this bid item. Bore exit must be located within a 30' wide and 60' long area centered on the location shown on the plans, otherwise the bore will not be accepted.

7 ITEM NO. 7 - 12" - 90° Mechanical Joint Fittings: This item shall cover the installation of 12" 90° mechanical joint fittings as necessary for the complete installation, including thrust blocking, in locations shown on the plans and/or as necessary. Payment will be made according to the unit price bid in the Bid Form for each fitting installed.

8 ITEM NO. 8 - 12" - 45° Mechanical Joint Fittings: This item shall cover the installation of 12" 45° mechanical joint fittings as necessary for the complete installation, including thrust blocking, in locations shown on the plans and/or as necessary. Payment will be made according to the unit price bid in the Bid Form for each fitting installed.

9 ITEM NO. 9 - 12" - 22-1/2° Mechanical Joint Fittings: This item shall cover the installation of 12" 22-1/2° mechanical joint fittings as necessary for the complete installation, including thrust blocking, in locations shown on the plans and/or as necessary. Payment will be made according to the unit price bid in the Bid Form for each fitting installed.

10 ITEM NO. 10 - 12" Gate Valve & Box: This item shall cover the installation of a 12" Gate Valve, Valve Box and concrete collar/pad as indicated on the plans, details and specifications. This shall include all equipment, labor, and material to complete the installation. Payment will be made on the unit price bid in the Bid Form for each complete installation.

11 ITEM NO. 11 - 12"x12" Tee: This item shall include the installation of a 12" x 12" Tee in the locations as indicated on the plans and specifications, including but not limited to thrust blocking. This shall include all equipment, labor, and material to complete the installation. Payment will be made on the unit price bid in the Bid Form for each complete installation.

12 ITEM NO. 12 - 18"X12" Tapping Sleeve & Valve: This item shall cover the installation of a 18"x12" tapping sleeve & valve and concrete collar/pad including thrust blocking, labor, and any additional components necessary to complete installation in locations as shown on the plans. Payment will be made on the basis of each 18"x12" tapping sleeve installed.

13 ITEM NO. 13 - 8"X12" Mechanical Joint Reducer: This item shall include the installation of a 8"x12" Reducer in the locations as indicated on the plans and specifications, including but not limited to a concrete deadman and/or rods. This shall include all equipment, labor, and material to complete the installation. Payment will be made on the unit price bid in the Bid Form for each complete installation.

14 ITEM NO. 14 - 2" Air Release Valve: This item shall cover the installation of air release valve and associated manhole as well as all components necessary for the complete installation including connection to main pipeline, riser pipe, isolation valve, etc. in the locations shown on the plans. Payment will be made according to the unit price bid in the Bid Form.

15 ITEM NO. 15 - Fire Hydrant Assembly: This item shall cover the installation of the fire hydrant, 6" gate valve & valve box, mainline diameter x 6" branch tee, 6" DIP hydrant leg, riser adjustments, thrust blocking and rodding and concrete collars/pads around valve and hydrant. This shall include all equipment, labor, and material to complete the installation. Note that this does not include any valves placed on the main line adjacent to the hydrant location. Payment will be made on the unit price bid in the Bid Form for each complete installation.

16 ITEM NO. 16 - Construction Entrance / Exit: This item shall cover the installation of the construction entrance / exits and includes all associated grading, aggregate and additional materials as well as all equipment and labor to complete the installation as shown on drawings and details. Payment will be made on the unit price bid in te Bid Form for each complete installation.

17 ITEM NO. 17 - Silt Fence: This item shall include all silt fence as shown on the erosion control plans and all associated materials and labor required for the installation as shown in the drawings and details. Payment will be made on the basis of the linear feet of silt fence.

18 ITEM NO. 18 - Non-Erosive Outlets: This item shall include the installation, labor, and materials necessary for the installation of all Non-Erosive Outlets in locations as shown on the plans and details. Payment will be made on the basis of each Non-Erosive Outlet installed.

19 ITEM NO. 19 - Site Stabilization: This item shall include all temporary seeding, permanent seeding, mulching, tacking, rolled erosion control products, soil amendments and surface roughening as shown on the erosion control plans. Also included is all associated materials and labor necessary for the installation. Payment will be made on a lump sum basis for all site stabilization work performed.

20 ITEM NO. 20 - NCDOT Controlled Access Fence: This item shall cover the installation of NCDOT Controlled Access Fence including all materials, labor, and equipment necessary to construct the fence in locations as shown on the plans. Payment will be made on the basis of linear feet of actual NCDOT Controlled Access Fence installed.

21 ITEM NO. 21 - Final Grassing & Cleanup: This item shall cover the final clean up and restoration of the site at the conclusion of the project, including removal of construction entrances and all remnants of construction work and erosion control materials. This shall include all material, equipment, and labor to complete the installation. Payment will be made on the lump sum in the Bid Form.

22 ITEM NO. 22 - Rip Rap (ALLOWANCE): This item shall cover Rip Rap stone for miscellaneous uses such as surface stabilization, erosion control or other uses as may be directed by the Engineer and includes the purchase, delivery, storage and placement of the Rip Rap. Payment will be made on the ton of placed Rip Rap.

23 ITEM NO. 23 - Trench Rock Removal (ALLOWANCE): This item shall cover the removal and proper off-site disposal of material that classifies as rock and cannot be removed by routine means of trench excavation. It shall also include all necessary materials, equipment and labor. Payment will be made on the cubic yards of necessary trench volume created, not the gross cubic yardage of rock removed.

24 ITEM NO. 24 - Unsuitable Soil Removal (ALLOWANCE): This item shall include the removal and proper off-site disposal of soil that is not suitable for fill or backfill material. It shall also include all necessary materials, equipment and labor. Payment will be made on the cubic yards of soil removed.

25 ITEM NO. 25 - Suitable Backfill (ALLOWANCE): This item shall include the providing and placing suitable backfill material where on-site materials are lacking. This shall include the purchase, delivery, storage and placement of suitable backfill. Payment will be made on the cubic yards of placed suitable backfill.

26 ITEM NO. 26 - #57 Washed Stone (ALLOWANCE): This item shall cover #57 Washed Stone for miscellaneous uses such as surface stabilization, erosion control or other uses as may be directed by the Engineer and includes the purchase, delivery, storage and placement of the washed stone. Payment will be made on the ton of placed washed stone.

27 ITEM NO. 27 - NCDOT Road Trench Repair and Patching: This item shall cover the temporary and final patching over all utility trenches through NCDOT roads as shown on the drawings and details. This shall include all material, equipment, and labor to complete the installation. Payment will be made on the square footage of pavement repair in the Bid Form.

28 ITEM NO. 28 - NCDOT Road 2" Asphalt Milling and Overlay: This item shall cover the milling and final 2" overlay on all NCDOT roads as shown on the drawings and details. This shall include all material, equipment, and labor to complete the installation. Payment will be made on the square footage of pavement repair in the Bid Form.

SECTION 02780
HORIZONTAL DIRECTIONAL DRILLING

PART 1: GENERAL

1.01 SCOPE OF WORK

A. The work covered by this Section includes furnishing all labor, materials and equipment required to install underground pipelines using the horizontal directional drilling (HDD) method of installation.

B. Supply all materials and perform all work in accordance with applicable American Society for Testing and Materials (ASTM), American Water Works Association (AWWA), American National Standards Institute (ANSI) or other recognized standards. Latest revisions of all standards are applicable.

1.02 SUBMITTALS

A. Submit shop drawings and product data.

B. Material Submittals: The Contractor shall provide shop drawings and other pertinent specifications and product data as follows:

1. HDD pipe showing sizes, wall thicknesses, pipe classification and yield strengths.
2. Directional drilling equipment
3. Drilling fluid
4. Fusing equipment and strengths
5. Fittings and/or couplings to connect to mainline pipe
6. Layout drawing of proposed entry and exit points

1.03 STORAGE AND PROTECTION

A. All materials shall be stored in accordance with the manufacturer's recommendations and as approved by the Engineer.

PART 2: PRODUCTS

2.01 MATERIALS AND CONSTRUCTION

A. General:

1. The horizontal directional drilled pipe shall be the size, material, and Dimension Ratio shown on the Drawings.

2. The directional drilling equipment shall consist of a directional drilling rig of sufficient capacity to perform the bore and pullback of the pipe, a drilling fluid mixing & delivery system of sufficient capacity to successfully complete the installation, a guidance system to accurately guide boring operations, and trained and competent personnel to operate the system. All equipment shall be in good, safe operating condition with sufficient supplies, materials and spare parts on hand to maintain the system in good working order for the duration of this project.

B. Drilling Rig: The directional drilling machine shall consist of a hydraulically powered system to rotate, push and pull hollow drill pipe into the ground at a variable angle while delivering a pressurized fluid mixture to a guidable drill (bore) head. The machine shall be anchored to the ground to withstand the pulling, pushing and rotating pressure required to complete the crossing. The hydraulic power system shall be self-contained with sufficient pressure and volume to power drilling operations. The hydraulic system shall be free of leaks. The rig shall have a system to monitor and record maximum pull-back pressure during pull-back operations.

C. Drill Head: The drill head shall be steerable by changing its rotation and shall provide the necessary cutting surfaces and drilling fluid jets. If applicable, the drill head shall be able to bore through rock.

1. Rock excavation is defined as the excavation of extremely hard or lithified materials that require blasting or the use of ripping or excavating equipment larger than for common soil or weathered rock excavation. The excavation and removal of isolated boulders or rock fragments larger than 1 cubic yard encountered in materials otherwise conforming to the definition of common excavation shall be classified as rock excavation.

D. Guidance System: The guidance system shall be of a proven type and shall be setup and operated by personnel trained and experienced with this system. The Operator shall be aware of any magnetic anomalies and shall consider such influences in the operation of the guidance system if using a magnetic system. The guidance system shall allow for accurate horizontal and vertical location of the bore head.

E. Drilling Fluid (Mud) System:

1. Mixing System: A self-contained, closed, drilling fluid mixing system shall be of sufficient size to mix and deliver drilling fluid composed of bentonite clay, potable water and appropriate additives. The drilling fluid reservoir tank shall be sized for adequate storage of the mud. Mixing system shall continually agitate the drilling fluid during drilling operations.

2. Drilling Fluids: Drilling fluid shall be composed of clean water and an appropriate additive. Water shall be from a clean source with characteristics per mixing requirements of the manufacturer. The water and additives shall be mixed thoroughly and be absent of any clumps or clods. No hazardous additives may be used. Drilling fluid shall be maintained at a viscosity sufficient to suspend cuttings and maintain the integrity of the bore wall.

F. High Density Polyethylene Pipe (HDPE):
   1. Classification: HDPE pipe shall meet or exceed the requirements of ASTM D3350 for PE4710 material with a cell classification of 445574C, or better. The pipe manufacturer shall be listed with the Plastic Pipe Institute as meeting the recipe and mixing requirements of the resin manufacturer for the resin used to manufacture the pipe in this project.

   2. Joining: Joining shall be performed by thermal buttfusion in accordance with the manufacturer's recommendations. Butt-fusion joining shall be 100% efficient offering a joint weld strength equal to or greater than the tensile strength of the pipe.

   3. Standards: HDPE pipe shall meet or exceed the requirements of AWWA C906 and NSF 61 (for potable water applications). Appropriate AWWA and NSF designation/seals shall be printed on the exterior of the pipe.

   4. Color: Sanitary sewer pipe exterior shall be green in color or contain green striping. Potable water pipe exterior shall be blue in color or contain blue striping.

G. Fusible Polyvinyl Chloride Pipe (FPVC):
   1. Classification: FPVC pipe shall meet or exceed the requirements of ASTM D1784 for piping material with a cell classification of 12454, or better.

   2. Joining: Joining shall be performed by thermal buttfusion in accordance with the manufacturer's recommendations. Butt-fusion joining shall be 100% efficient offering a joint weld strength equal to or greater than the tensile strength of the pipe.

   3. Standards: FPVC pipe shall meet or exceed the requirements of AWWA C900 and NSF 61 (for potable water applications). Appropriate AWWA and NSF designation/seals shall be printed on the exterior of the pipe.

   4. Color: Sanitary sewer pipe exterior shall be green in color or contain green striping. Potable water pipe exterior shall be blue in color or contain blue striping.

PART 3: EXECUTION

3.01 GENERAL

A. Interpretation of soil investigation reports and data, investigating the site and determination of the soil conditions is the sole responsibility of the Contractor. Any subsurface investigation performed by the Contractor must be approved by the appropriate authority having jurisdiction over the site.

B. Spill Protection: The Contractor shall place silt fence between all drilling operations and any drainage, wetland, waterway or other areas designated for such protection by the Contract Documents, state, federal and local regulations. Additional environmental protection necessary to contain any hydraulic or drilling fluid spills shall be put in place, including berms, liners, turbidity curtains and other measures. The Contractor shall adhere to all applicable environmental regulations.

C. Pipe Preparation: The pipe shall be welded/fused together in one length, if space permits. Pipe will be placed on pipe rollers before pulling into bore hole with rollers spaced close enough to prevent excessive sagging of pipe.

D. Pilot Hole:

1. Pilot hole shall be drilled on bore path with no deviations greater than 5% of depth over the length of 100 feet. In the event that the pilot does deviate from the bore path more than 5% of depth in 100 feet, the Contractor must notify the Engineer and the Contractor may be required to pull-back and re-drill from the location along the bore path before the deviation. In all cases, depth of bore must meet minimum clearances from obstacles or waterways as shown on the Drawings.

2. In the event that a drilling fluid fracture, inadvertent returns or returns loss occurs during pilot hole drilling operations, the Contractor shall cease drilling, wait at least 30 minutes, inject a quantity of drilling fluid with a viscosity exceeding 120 seconds as measured by a March funnel and then wait another 30 minutes. If mud fracture or returns loss continues, the Contractor must cease operations and notify the Engineer. The Engineer and Contractor will discuss additional options and work then will proceed accordingly.

E. Reaming: Upon successful completion of the pilot hole, the Contractor will ream bore the hole to a minimum of 25% greater than outside diameter of the pipe using the appropriate tools. The Contractor shall not attempt to ream, at one time, more than the drilling equipment and mud system are designed to safely handle

F. Pull-Back:

1. After successfully reaming the bore hole to the required diameter, the Contractor will pull the pipe back through the bore hole. In front of the pipe will be a swivel to prevent torsional stresses occurring in the pipe. Once pull-back operations have commenced, operations must continue without interruption until the pipe is completely pulled into the bore hole. During pull-back operations the Contractor shall not apply more than the maximum safe pipe pull pressure at any time.

2. In the event that the pipe becomes stuck, the Contractor will cease pulling operations to allow any potential hydro-lock to subside and will then continue pulling operations. If the pipe remains stuck, the Contractor must immediately notify the Engineer. The Engineer and Contractor will discuss options and work then will proceed accordingly.

3.02 GROUNDWATER CONTROL

A. The Contractor shall control the groundwater throughout the construction of the casing.

B. Methods of dewatering shall be at the option and responsibility of the Contractor. Maintain close observation to detect the settlement or displacement of surface facilities due to dewatering. Should settlement or displacement be detected, notify the Engineer immediately and take such action as necessary to maintain safe conditions and prevent damage.

C. When water is encountered, provide and maintain a dewatering system of sufficient capacity to remove water on a 24-hour basis keeping excavations free of water until the backfill operation is in progress. Dewatering shall be performed in such a manner that removal of soil particles is held to a minimum. Contractor shall be responsible for managing dewatering operations in compliance with applicable rules.

3.03 TOLERANCES & RECORD KEEPING

A. Tolerances: Each exit point shall be located as shown with an over-length tolerance of 10 feet for directional drills of 1,000 linear feet or less and 40 feet for directional drills of greater than 1,000 linear feet and an alignment tolerance of 5 feet left/right with due consideration of the position of the other exit points and the right-of-way or permanent easement.

B. Record Keeping: The Contractor shall plot the actual horizontal and vertical alignment of the pilot bore at intervals not exceeding 30 feet. This “as built” plan and profile shall be updated as the pilot bore is advanced.

3.04 QUALITY CONTROL

A. Hydrostatic Testing:

1. After completion of the HDD installation, the pipe shall be hydrostatically tested for leaks and defects. Test procedures shall meet the requirements of ASTM F2164 or AWWA C605, depending on pipe material.

2. The pipe shall be allowed to thermally stabilize and equalize before pressurizing for the test procedure. Prior to the test procedure, the pipeline shall be slowly filled, not pressurized, with water at ambient temperature. Remove air from the line at high points. After filling, allow 3-hours to 24-hours for the system to equalize and allow for any dissolved air to vent.

3. The pipe shall be tested at 1.5 times the design pressure rating for the application as measured at the lowest point in the test section. The maximum allowable time for the pipe to be pressurized to this level is eight (8) hours. If the test is not completed due to leakage, equipment failure, or for any other reason, depressurize the test section completely, and allow it to relax for at least eight (8) hours before pressurizing the test section again.

4. Gradually pressurize the test section to test pressure, and add make-up water as necessary to maintain maximum test pressure for four (4) hours. During the initial expansion phase, polyethylene pipe will expand slightly due to elasticity and Poisson effects. Additional test liquid will be required to maintain pressure. The amount of additional test liquid will vary because expansion in the PE pipe is not linear. It is not necessary to monitor the amount of water added during the initial expansion phase. If test pressure cannot be attained, or if it takes an unreasonably long time to reach test pressure, there may be faults such as excessive leakage, entrapped air, or open valving, or the pressurizing equipment may be inadequate for the size of the test section. If such faults exist, discontinue pressurizing and correct them before continuing.

5. Immediately following the initial expansion phase, reduce test pressure by 10 psi and stop adding test liquid. Monitor the pressure for 1 hour. If no visual leakage is observed and test pressure remains steady (within 5% of the target value) for one (1) hour, no leakage is indicated.

B. Disinfection: The pipeline shall be disinfected per AWWA C651 as described in other Sections.

END OF SECTION

GENERAL WATERLINE CONSTRUCTION NOTES:

1. Water construction on this site is authorized by permits issued by the North Carolina Department of Environmental Quality (NCDEQ), and the OWNER. The work is subject to inspections at all times by representatives of NCDEQ, the OWNER, and the Engineer. The permits require certification of completion by the Engineer of the water systems prior to issuance of final operation approval by NCDEQ.
2. The Contractor shall verify the exact location and elevation for all utilities, drainage and other underground facilities both existing and proposed, and shall notify the Engineer of any discrepancies or conflicts, prior to construction.
3. Ferrous piping for both water and sewer shall be installed within 10 ft. Of a crossing if:
   3.1. A sewer line crosses over a water line, or
   3.2. The vertical clearance between water and sewer lines is less than 18 inches.
4. A horizontal separation of ten (10) feet shall be maintained between sewer and water line unless laid in separate trenches with the bottom of the water line at least 18 inches above the top of the sewer line, and ferrous material used for both water and sewer.
5. A vertical separation of twelve (12) inches shall be maintained between storm drain and water lines.
6. The Contractor shall coordinate exact locations of vaults, meters. Backflow prevention devices, and service lines with the detailed architectural, plumbing, landscaping plans, and civil site plans.
7. All water lines shall have three (3) feet minimum cover and shall be constructed of a ferrous material, unless otherwise specified.
8. The Contractor shall protect existing utilities during construction. Repairs shall be made in accordance with applicable standards of appropriate agencies at the Contractor's expense.
9. The Contractor shall notify N.C. One-call center & appropriate utility agencies prior to performing any work.
10. All water meters must be placed in front of the dwelling which they serve. Outside driveways and located in relatively flat areas, not steep banks or slopes, at a maximum of five (5) feet off of the back of curb or edge of pavement. In areas where grading may present a conflict with this requirement, all water meters must be installed within the road right-of-way line, upon approval by the Engineer. In cases where multiple meters are installed to serve connected single family housing units, all meters must be tagged with brass plates inside the meter box labeled with the unit number or address corresponding to that meter.
11. A three (3) foot minimum separation between the back of curbledge of pavement and the water lines is required unless otherwise specified.
12. All water meter fittings, valves, and other appurtenances shall be lead free materials.
13. The Contractor shall provide erosion control measures to control runoff from the construction site. The Contractor shall be responsible for any fines that may be levied due to offsite sedimentation created during construction.
14. The Contractor shall be responsible for any damage to existing roads during construction and shall repair roads in accordance with the requirements of the UTILITY SYSTEM OWNER and/or the NCDOT (as applicable for jurisdiction). Open-cut on roadways shall be allowed except where indicated on the drawings or where specific permission must be granted by the UTILITY SYSTEM OWNER. Sand or similar material approved by the UTILITY SYSTEM OWNER shall be placed as a protective barrier between track equipment and the road and cleaned up properly after construction.

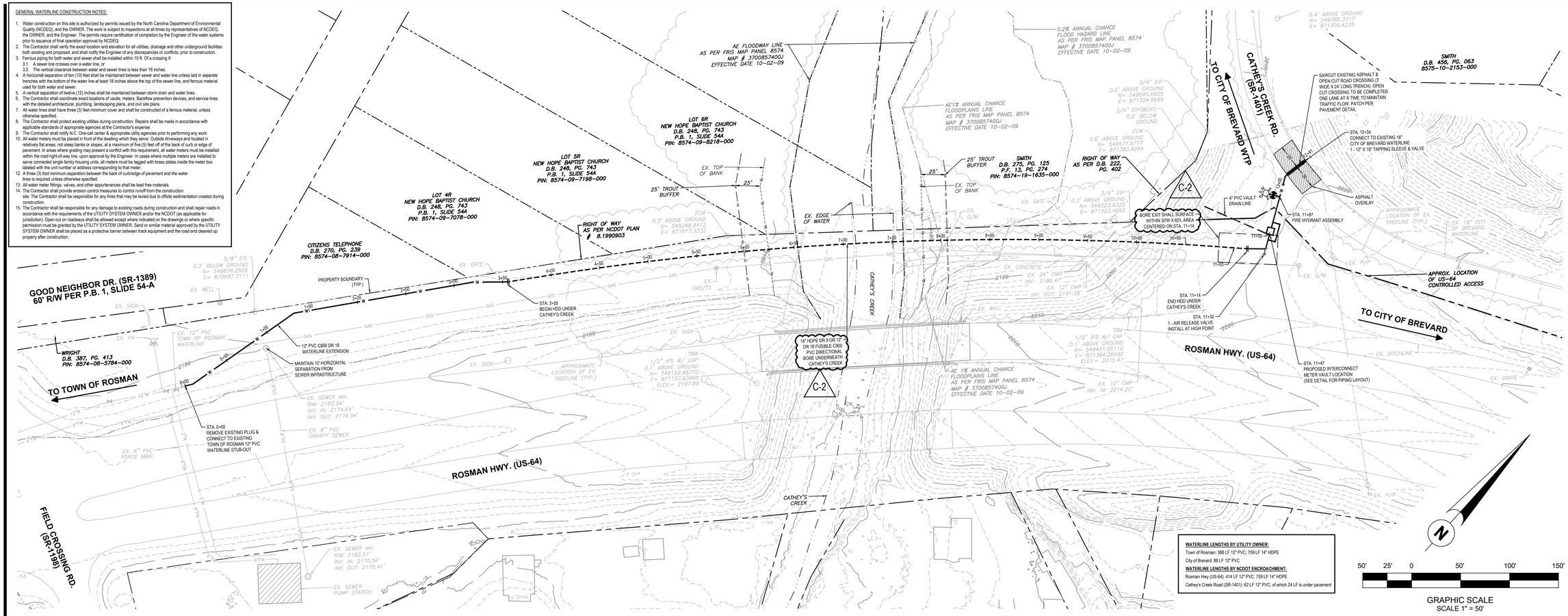

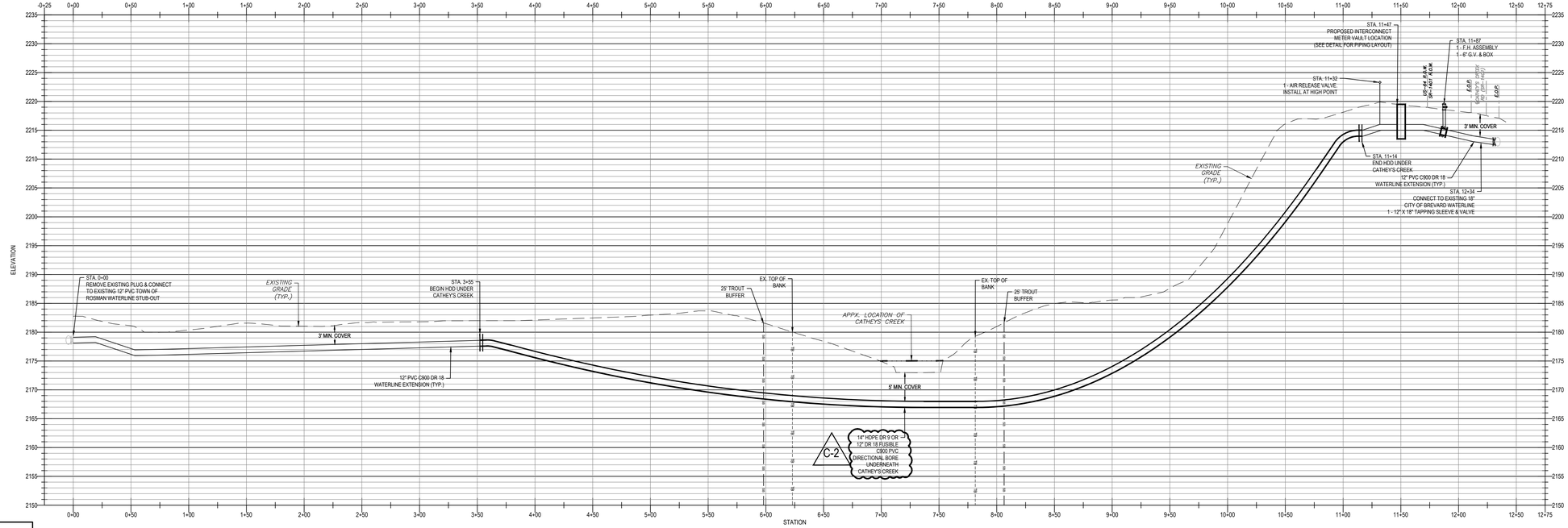

WATERLINE PROFILE

H. SCALE: 1"=50'
V. SCALE: 1"=10'

WATERLINE LENGTHS BY UTILITY OWNER:
Town of Rosman: 388 LF 12" PVC, 759 LF 14" HDPE
City of Brevard: 88 LF 12" PVC

WATERLINE LENGTHS BY NCDOT ENCROACHMENT:
Rosman Hwy (US-64): 414 LF 12" PVC, 759 LF 14" HDPE
Cathey's Creek Road (SR-1401): 62 LF 12" PVC, of which 24 LF is under pavement

IF YOU DIG
NORTH CAROLINA
CALL US FIRST!
811
N.C. ONE CALL CENTER
IT'S THE LAW!

CONSTRUCTION PLANS FOR:

TOWN OF ROSMAN AND CITY OF BREVARD WATERLINE INTERCONNECT for TRANSYLVANIA COUNTY

Transylvania County, North Carolina

#	REVISION DESCRIPTION	DATE
A	Issue 1 - Permit Submittal	02/13/2024
B	Issue 1 - Permit Resubmittal	03/07/2024
B	Issue 2 - Permit Resubmittal	04/18/2024
B	Issue 3 - DWI Submittal	06/17/2024
B	Issue 4 - NCDOT Revisions	07/30/2024
C	Issue 1 - Bid Set	08/08/2024
C	Issue 1 - Addendum 1	09/10/2024

HIGH COUNTRY ENGINEERING

HIGH COUNTRY ENGINEERING, P.C.
81 CENTRAL AVENUE
ASHEVILLE, NORTH CAROLINA 28801
T: 828.230.4511
NC FIRM NO.: C-3347

DocuSigned by: Jacob Gray
NORTH CAROLINA PROFESSIONAL ENGINEER SEAL 047761 ENGINEER JACOB D. GRAY
9/10/2024

TOR & COB WATERLINE INTERCONNECT

SHEET TITLE: WATERLINE PLAN & PROFILE

PROJECT NO. TRA012
SHEET NO. C-1
DATE: 09/10/2024
ISSUE No. C-2
of 5

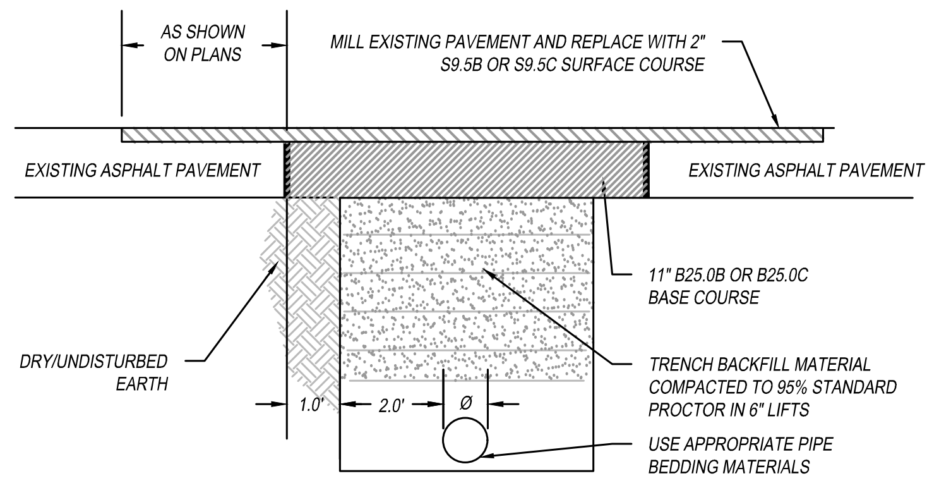

PAVEMENT REPAIR AND RESURFACING FOR NCDOT ROADS

NOT TO SCALE

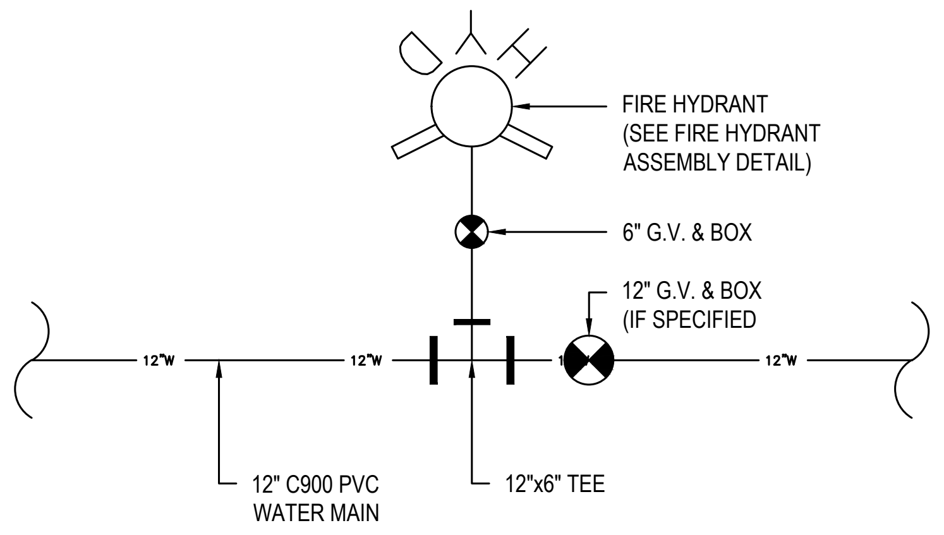

TYP. FIRE HYDRANT ASSEMBLY CONNECTION

NOT TO SCALE

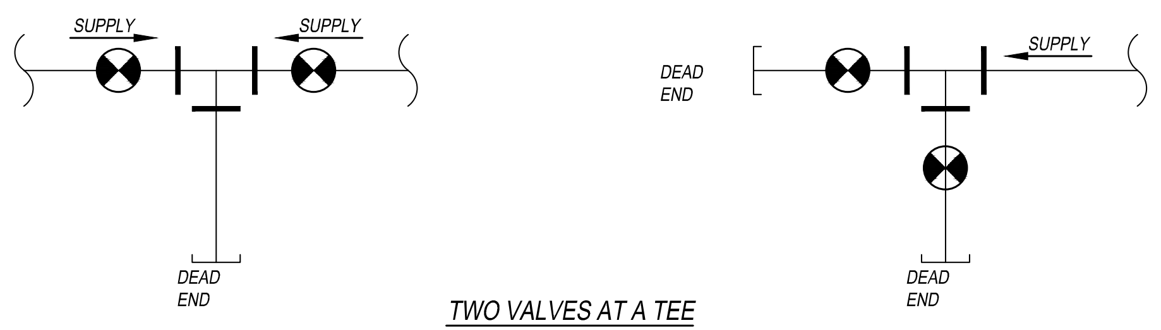

TWO VALVES AT A TEE

NOTES:
1. WHEN THERE IS ONLY ONE SUPPLY LEG FEEDING TWO DEAD END LEGS, PLACE VALVES ON DEAD END LEGS.
2. WHEN THERE ARE TWO SUPPLY LEGS FEEDING ONE DEAD END LEG, PLACE VALVES ON SUPPLY LEGS.
3. WHEN ALL THREE LEGS ARE SUPPLY, ENGINEER'S CHOICE.
4. ON HYDRANT TEE, ONE VALVE IS ALWAYS ON HYDRANT LEG.

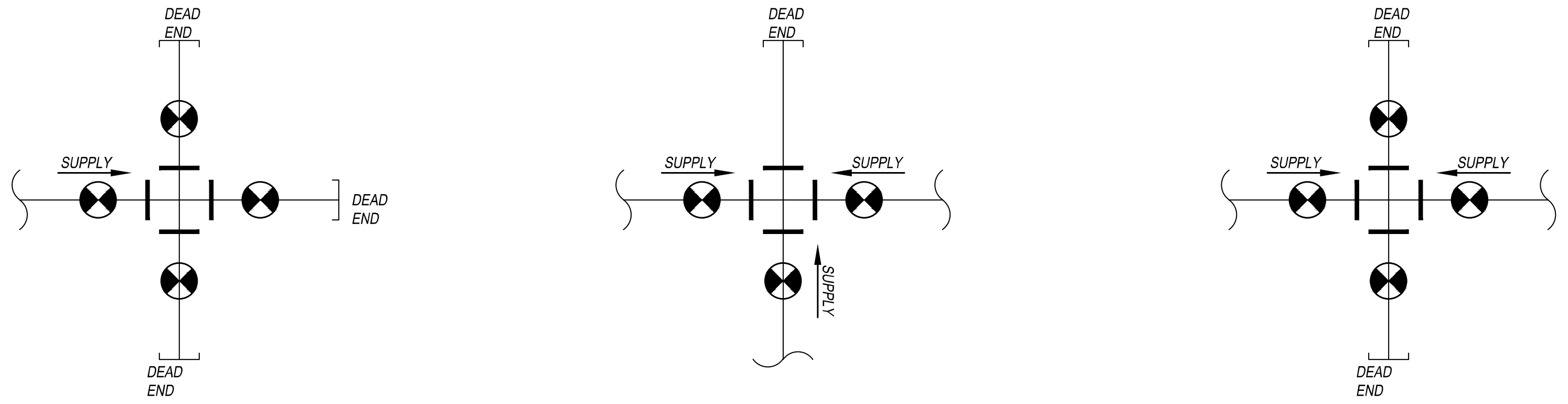

NOTES:
1. WHEN THERE IS ONLY ONE SUPPLY AND THREE DEAD END LEGS, PLACE VALVES ON DEAD END LEGS
2. WHEN THERE ARE THREE SUPPLY LEGS AND ONE DEAD END LEG, PLACE VALVES ON SUPPLY LEGS.
3. WHEN THERE ARE TWO SUPPLY LEGS AND TWO DEAD END LEGS, PLACE VALVES ON ALL FOUR LEGS.
4. WHEN ONE LEG AT AN INTERSECTION IS A HYDRANT LEG, VALVE MUST BE PLACED ON A HYDRANT LEG. VALVING ON REMAINING LEGS TO BE PLACED AS THOUGH THEY MAKE UP A TEE.
5. A "SUPPLY LEG" IS CONNECTED TO THE TREATED WATER SOURCE BY PIPING EQUAL AND OR GRATER THAN ITS SIZE AND SEPARATE FROM THE TEE OR CROSS BEING CONSIDERED.

THREE AND FOUR VALVES AT AN INTERSECTION

TYPICAL VALVE CONFIGURATION

NOT TO SCALE

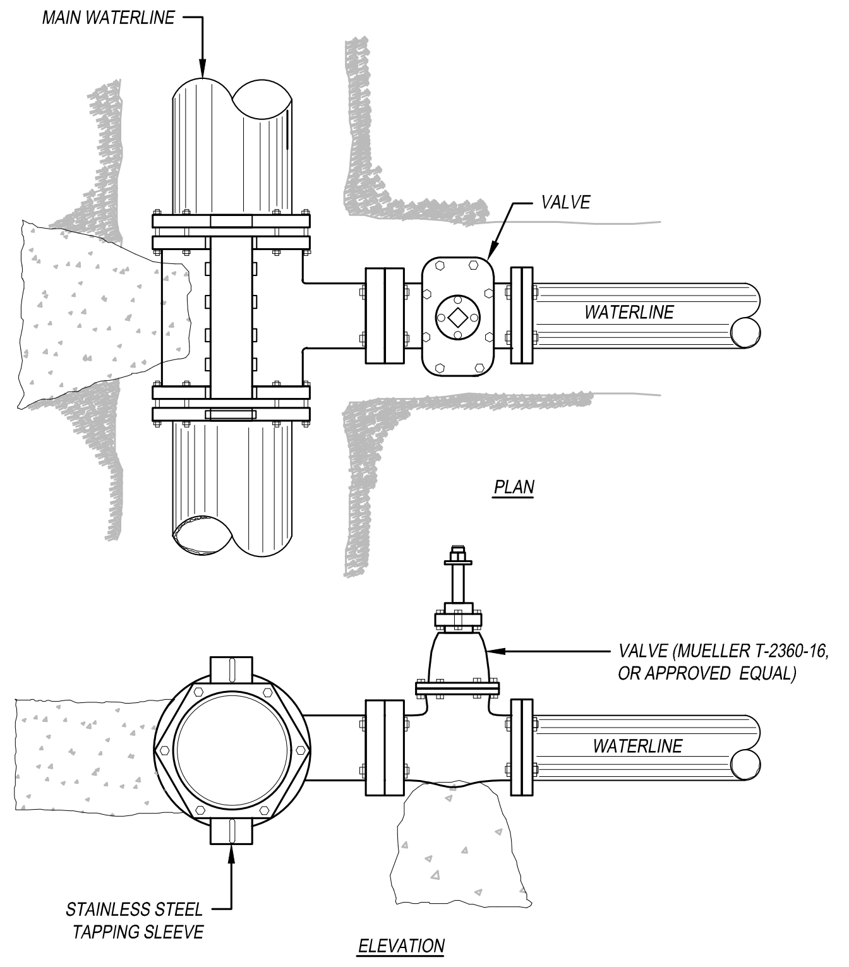

NOTES:
1. TAPPING SLEEVE SHALL BE MUELLER #H-304SS OR APPROVED EQUAL.
2. APPROVED RESILIENT SEAT TAPPING VALVE.
3. SOLID CONCRETE OR BRICK BLOCKING WILL BE USED AS FOOTING FOR DUCTILE IRON PIPE.
4. CONCRETE WILL NOT CONTACT BOLTS OR ENDS OF MECHANICAL JOINT FITTINGS.
5. SEE "THRUST BLOCKING" DETAIL FOR APPROPRIATE DIMENSIONS.
6. ALL FITTINGS AND APPURTENANCES SHALL BE RESTRAINED JOINT.

TAPPING SLEEVE AND VALVE

NOT TO SCALE

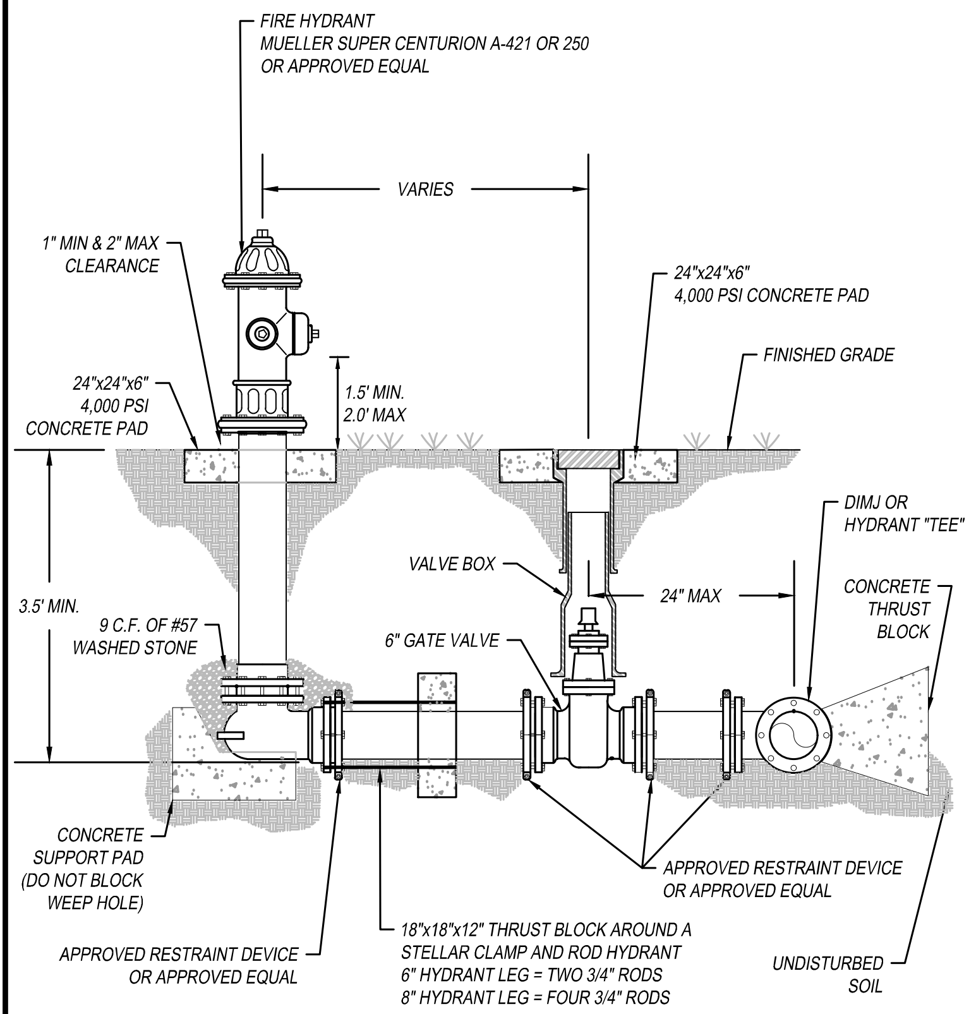

NOTES:
1. HYDRANT TO BE PLACED WITH PUMPER NOZZLE FACING THE TRAVEL/FIRE LAND.
2. TOP OF BLOCKING TO BE 2" FROM HYDRANT WEEP HOLES.
3. HYDRANT TEE MAY BE SUBSTITUTED FOR D.I.P. NIPPLE AND RODDING TO VALVE.

FIRE HYDRANT ASSEMBLY

NOT TO SCALE

NOTES:
1. SEE THRUST BLOCK DETAIL FOR DIMENSIONS.
2. CONCRETE SHALL NOT CONTACT BOLTS OR ENDS OF MECHANICAL FITTINGS.
3. VALVE BOX SHALL NOT CONTACT WATER MAIN OR VALVE.
4. VALVE PAD REQUIREMENTS SHALL NOT BE REQUIRED IN PAVED AREAS.
5. ALL VALVES MUST OPEN COUNTER CLOCKWISE AND CLOSE CLOCKWISE.
6. PRECAST CONCRETE COLLARS ARE NOT ACCEPTABLE.

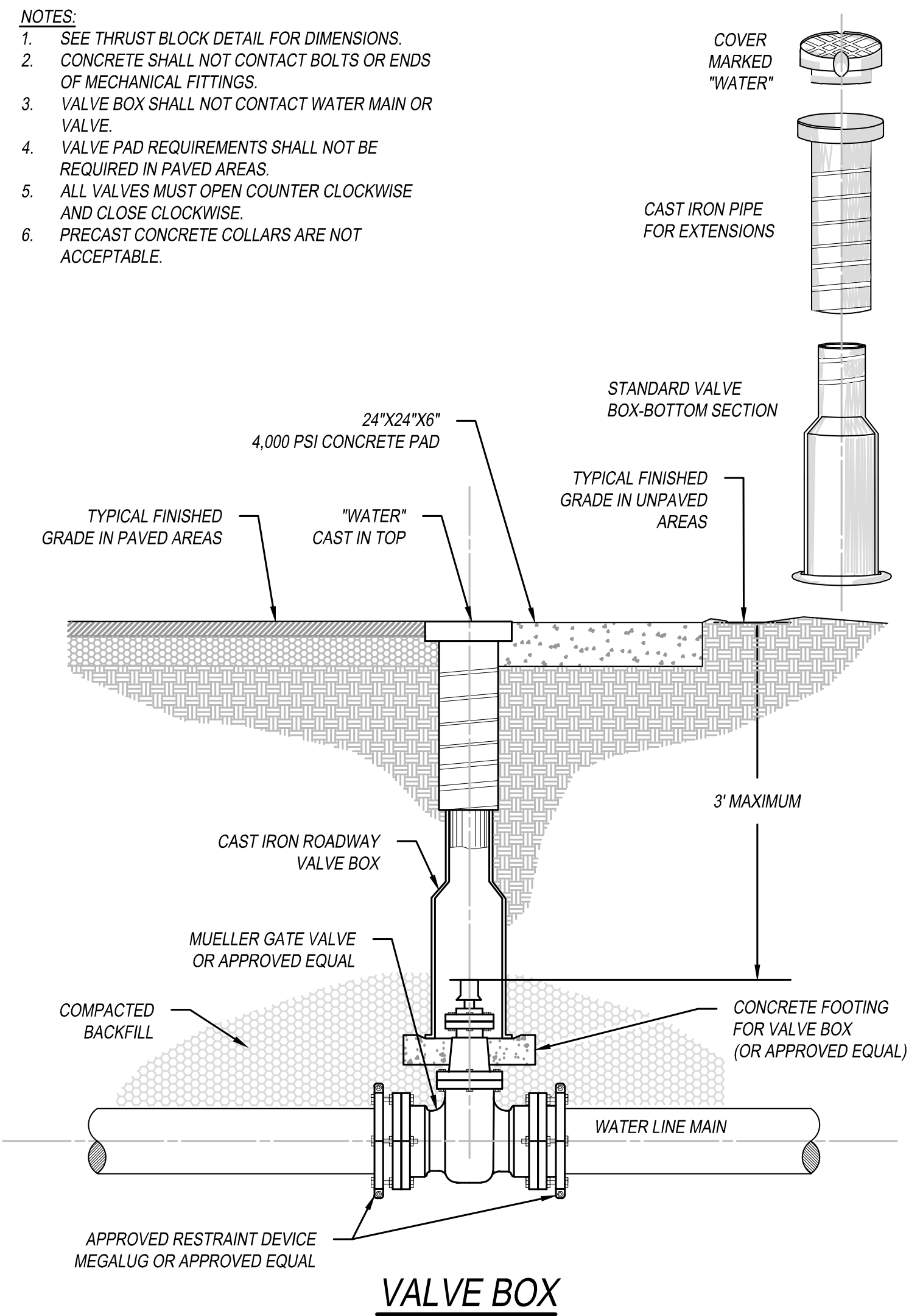

VALVE BOX

NOT TO SCALE

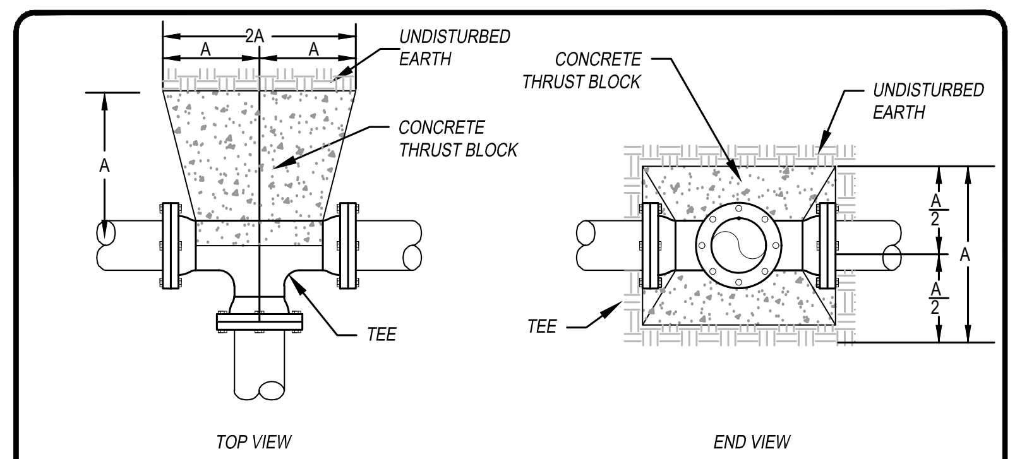

TYPICAL THRUST BLOCK FOR TEES
N.T.S.

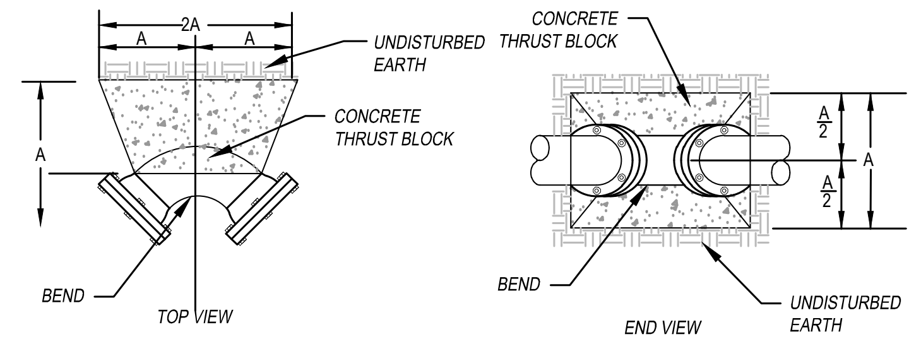

TYPICAL THRUST BLOCK FOR BENDS
N.T.S.

TABLE OF "A" DIMENSIONS (IN FEET)

BEND		90°	45°	22.5°	11.25°	TEE
PIPE SIZE	6"	1.4	1.1	1.0	1.0	1.2
	8"	1.9	1.5	1.5	1.5	1.6
	10"	2.4	1.8	1.8	1.8	2.0
	12"	2.8	2.1	2.0	2.0	2.4
	16"	3.8	2.8	2.5	2.5	2.8
	24"	5.6	4.2	3.0	3.0	4.5

NOTES:
1. ALL FITTINGS MUST BE RESTRAINED WITH MEGA LUGS.
2. FITTING JOINTS SHALL BE KEPT FREE OF CONCRETE. A LAYER OF POLYETHYLENE PLASTIC SHALL BE PLACED BETWEEN THE FITTING AND THE CONCRETE.
3. NO CONCRETE SHALL COVER BOLTS OR GLANDS.
4. PRE-CAST THRUST BLOCKS ARE NOT ACCEPTABLE.
5. CONCRETE SHALL HAVE 3,000 P.S.I. COMPRESSIVE STRENGTH.

THRUST BLOCKING

NOT TO SCALE

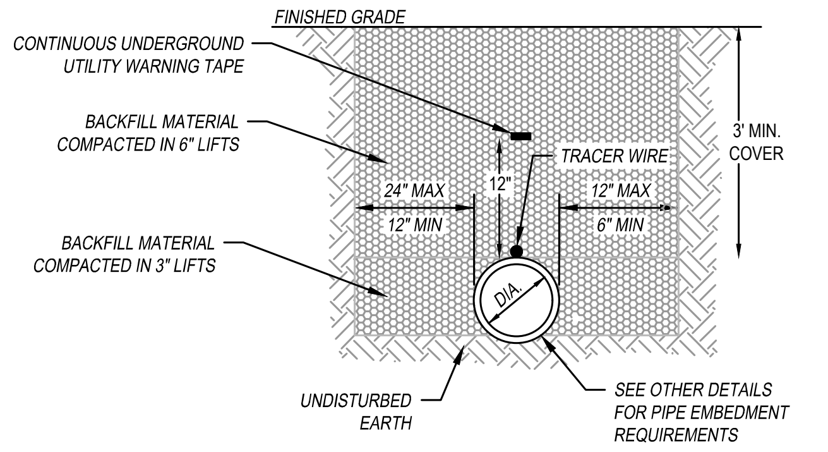

STANDARD EXCAVATION OUTSIDE PAVEMENT

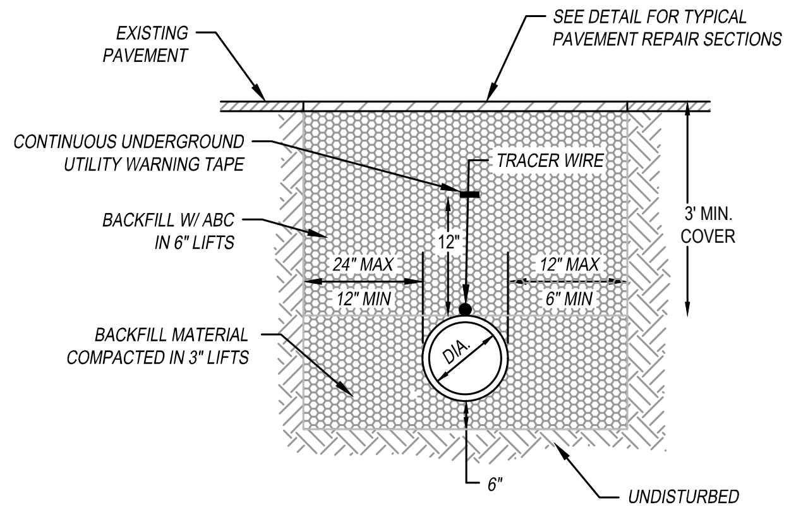

STANDARD EXCAVATION UNDER PAVEMENT

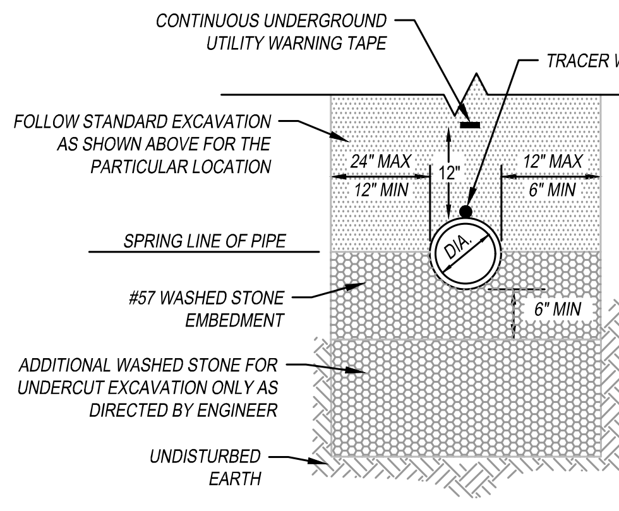

UNDERCUT EXCAVATION IN WET OR ROCKY CONDITIONS

NOTES:
1. CONSTRUCTION OF TRENCHES SHALL BE IN ACCORDANCE WITH THE LATEST OSHA REGULATIONS. CONTRACTOR SHALL BE RESPONSIBLE FOR COMPLIANCE WITH ALL APPLICABLE REGULATIONS.
2. TRENCHES EXCAVATED OUTSIDE OF EXISTING ROAD SHALL BE BACKFILLED WITH COMMON BACKFILL MATERIAL CONSISTING OF EXCAVATED MATERIALS EXCEPT HIGHLY ORGANIC SILTS AND CLAYS AND TAMPED THOROUGHLY. FILL SHALL BE DEPOSITED IN SUCCESSIVE, UNIFORM, APPROXIMATELY HORIZONTAL LAYERS. MATERIAL SHALL BE FREE OF ROOTS, STONES, AND DEBRIS. ALL MATERIAL SHALL HAVE AN IN-PLACE DENSITY OF AT LEAST 85% OF MAXIMUM DRY DENSITY (STANDARD PROCTOR) OR AS APPROVED BY THE ENGINEER. COMMON BACKFILL SHALL NOT CONTAIN STONE BLOCKS, BROKEN CONCRETE, MASONRY RUBBLE, OR OTHER SIMILAR MATERIALS. IT SHALL HAVE PHYSICAL PROPERTIES SUCH THAT IT CAN BE READILY SPREAD AND COMPACTED DURING FILLING. SNOW, ICE, AND FROZEN SOIL WILL NOT BE PERMITTED.
3. NO BOULDERS OR STONES IN EXCESS OF 4" IN SIZE SHALL BE USED AS PART OF THE INITIAL BACKFILL.
4. PIPE BEDDING MATERIAL SHALL BE #57 WASHED STONE.
5. BELL HOLES NOT SHOWN
6. INSTALL 12 GAUGE INSULATED TRACER WIRE FOR ALL WATERLINES.
7. MINIMUM COVER ON TOP OF PIPE IS 3 FEET.

TYPICAL WATERLINE TRENCH DETAIL

NOT TO SCALE

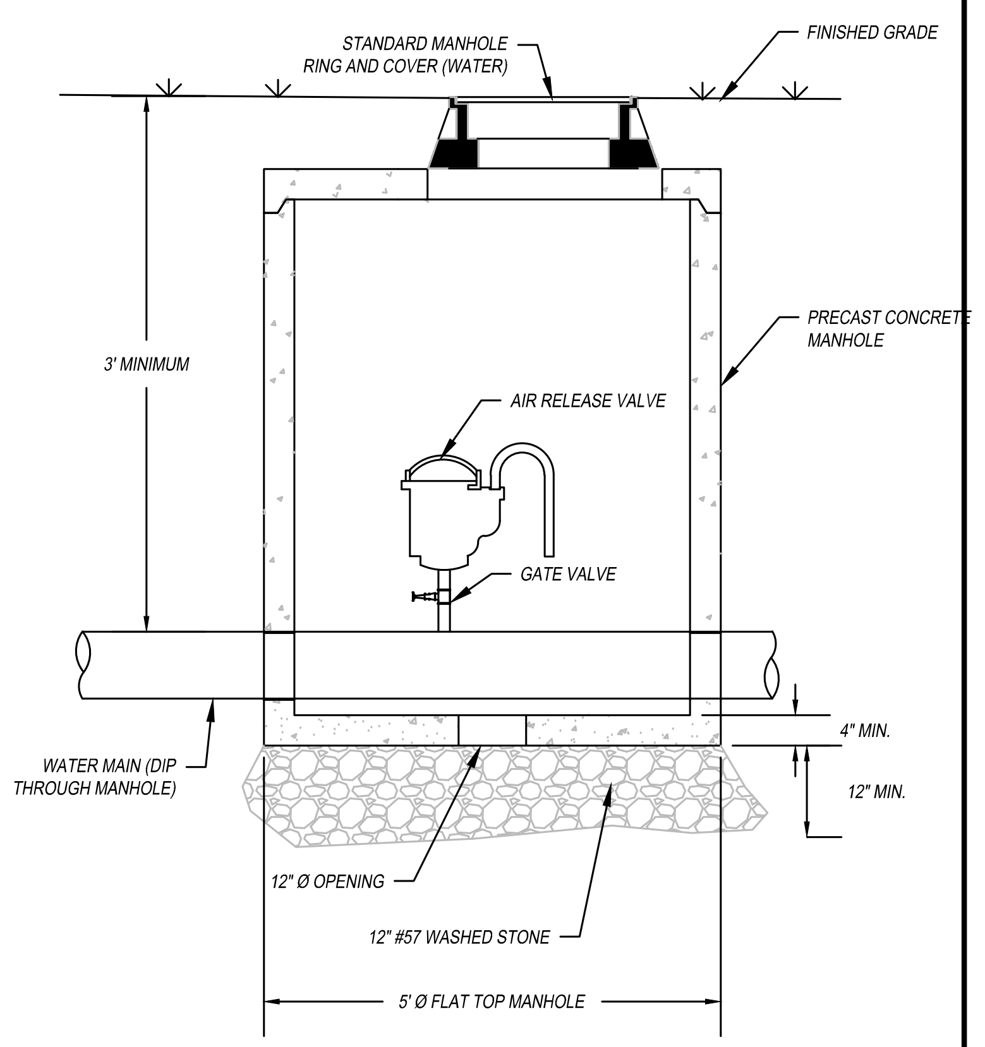

NOTES:
1. MANHOLE STEPS SHALL BE PLACED 16" O.C. WHEN DEPTH OF MANHOLE EXCEEDS 5 FEET.
2. OFFSET MANHOLE OPENING AND VALVE TO ALLOW ADEQUATE ACCESS/REPAIR SPACE..
3. ALL OPENINGS SHALL BE SEALED WITH WATERPROOF NON-SHRINKING GROUT.

AIR RELEASE VALVE IN MANHOLE

NOT TO SCALE

C-2

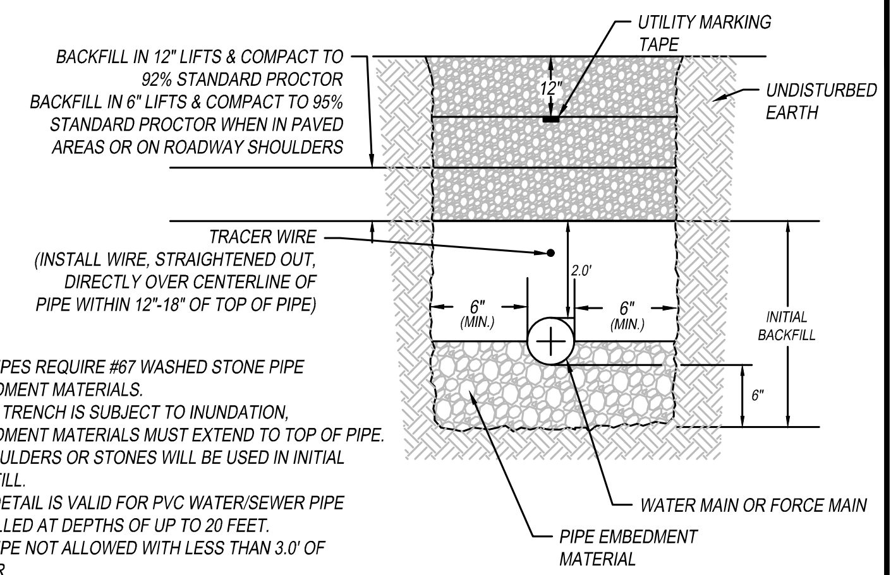

NOTES:
1. PVC PIPES REQUIRE #67 WASHED STONE PIPE EMBEDMENT MATERIALS.
2. WHEN TRENCH IS SUBJECT TO INUNDATION, EMBEDMENT MATERIALS MUST EXTEND TO TOP OF PIPE.
3. NO BOULDERS OR STONES WILL BE USED IN INITIAL BACKFILL.
4. THIS DETAIL IS VALID FOR PVC WATER/SEWER PIPE INSTALLED AT DEPTHS OF UP TO 20 FEET.
5. PVC PIPE NOT ALLOWED WITH LESS THAN 3.0' OF COVER.

PVC PIPE TRENCH DETAIL

NOT TO SCALE

CONSTRUCTION PLANS FOR:

TOWN OF ROSMAN AND CITY OF BREVARD WATERLINE INTERCONNECT
for
TRANSYLVANIA COUNTY

Transylvania County, North Carolina

#	DATE	REVISION DESCRIPTION
A	02/13/2024	Issue 1 - Permit Submittal
B	03/07/2024	Issue 1 - Permit Resubmittal
B	04/18/2024	Issue 2 - Permit Resubmittal
B	06/17/2024	Issue 3 - DWI Submittal
B	07/30/2024	Issue 4 - NCDOT Revisions
C	08/08/2024	Issue 1 - Bid Set
C	09/10/2024	Issue 1 - Addendum 1

HIGH COUNTRY ENGINEERING

HIGH COUNTRY ENGINEERING, P.C.
81 CENTRAL AVENUE
ASHEVILLE, NORTH CAROLINA 28801
T: 828.230.4511
NC FIRM NO.: C-3347

DocuSigned by:
Jacob Gray
06A1D63E65604B4...

NORTH CAROLINA PROFESSIONAL ENGINEER
SEAL 047761
JACOB D. GRAY
9/10/2024

TOR & COB WATERLINE INTERCONNECT

SHEET TITLE:
DETAILS

PROJECT NO. TRA012
SHEET NO. C-4 of 5
DATE: 09/10/2024
ISSUE No. C-2